Europe: +49 / 7731 8399 0 | Email: info@meder.com
USA: +1 / 508 295 0771 | Email: salesusa@meder.com
Asia: +852 / 2955 1682 | Email: salesasia@meder.com

Item No.:
9272661054
Item:
MK27-1A66B-500W

Dimensions mm[inch]
tolerances acc. to DIN ISO 2768-m
Toleranzen gem. DIN ISO 2768-m

Isometric
Scale 1:5
Maßstab 1:5

MAGNET

SENSOR

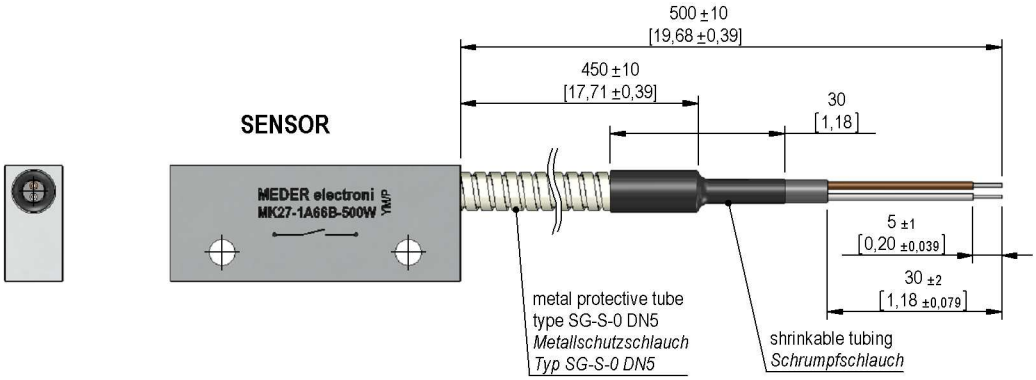

Cable
round cable LIYY AWG24, grey
UL-Style 2464/1061
colour of wires: white and brown
Rundkabel LIYY AWG24, grau
UL-Style 2464/1061
Aderfarben: weiss und braun

Terminals/Connector
ends tinned
Enden verzinnt

Schematic

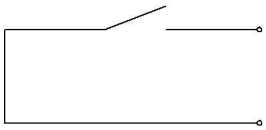

Marking
according to EN60062/factory code
gem. EN60062/Fertigungsstätte

MAGNET

SENSOR

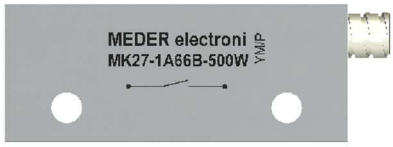

Housing sensor and magnet

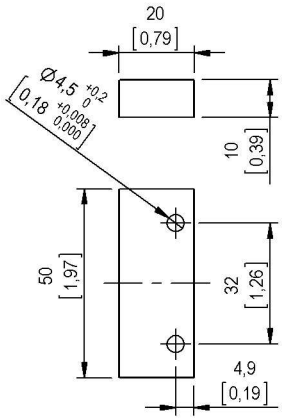

Switching distances

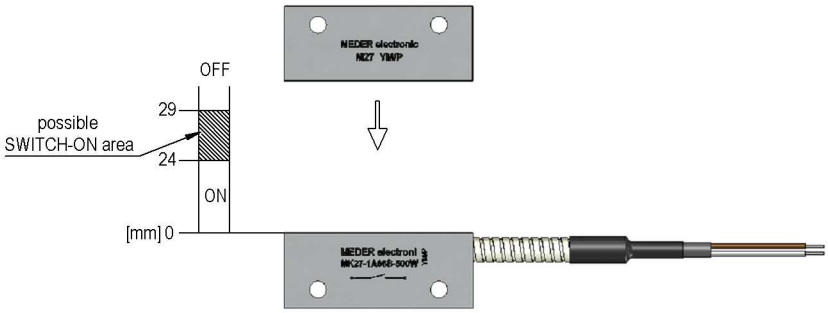

Europe: +49 / 7731 8399 0 | Email: info@meder.com
USA: +1 / 508 295 0771 | Email: salesusa@meder.com
Asia: +852 / 2955 1682 | Email: salesasia@meder.com

Item No.:
9272661054
Item:
MK27-1A66B-500W

Magnetic properties	Conditions	Min	Typ	Max	Unit
Pull in	at 20°C	40		60	AT
Test equipment		KMS-38 + PH 053			

Special Product Data	Conditions	Min	Typ	Max	Unit
Contact - No.		66			
Contact - form		A - NO			
Contact rating	Any DC combination of V & A not to exceed their individual max.'s			10	W
operating voltage	DC or Peak AC			180	V
operating ampere	DC or Peak AC			1,25	A
Switching current	DC or Peak AC			0,5	A
Sensor-resistance	measured with 40% overdrive			270	mOhm
Housing material		Aluminium			
Sealing compound		Polyurethan			

Environmental data	Conditions	Min	Typ	Max	Unit
Operating temperature	cable not moved	-30		80	°C
Operating temperature	cable moved	-5		80	°C
Storage temperature		-30		80	°C

Cable specification	Conditions	Min	Typ	Max	Unit
Cable typ		round cable			
Cable material		PVC			
Cross section [mm²]		AWG 24			

General data	Conditions	Min	Typ	Max	Unit
Mounting advice		over 5m cable, a series resistor is recommended.			
mounting advice 1		Decreased switching distances by mounting on iron			
mounting advice 2		Magnetically conductive screws must not be used			

Europe: +49 / 7731 8399 0 | Email: info@meder.com
USA: +1 / 508 295 0771 | Email: salesusa@meder.com
Asia: +852 / 2955 1682 | Email: salesasia@meder.com

Item No.:
9272851054
Item:
MK27-1A85C-500W

Dimensions mm[inch]
tolerances acc. to DIN ISO 2768-m
Toleranzen gem. DIN ISO 2768-m

Isometric
Scale 1:2
Maßstab 1:2

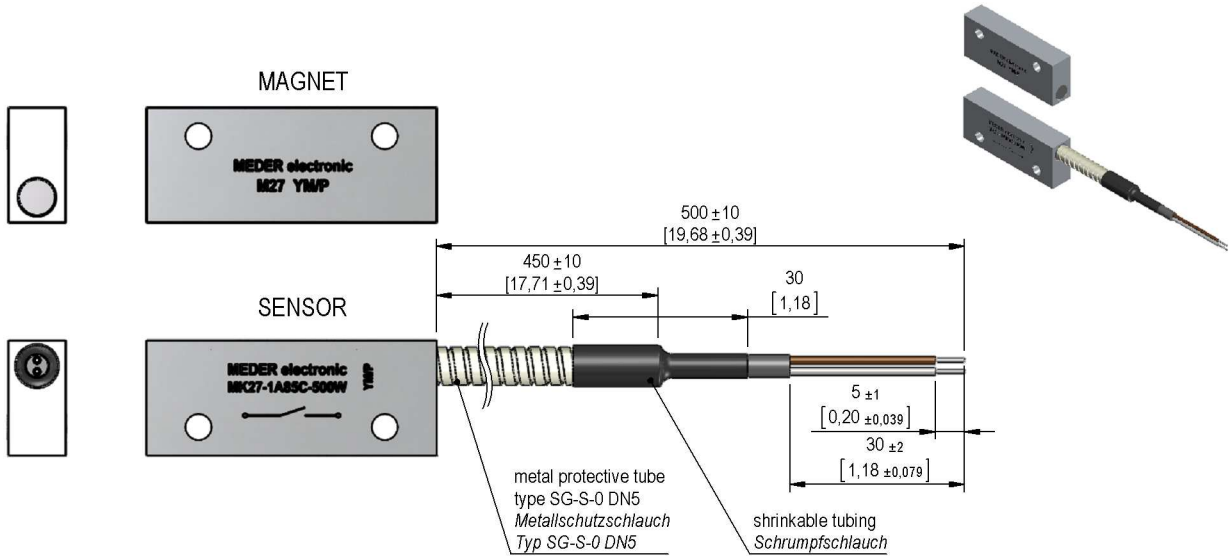

Cable
round cable LIYY AWG24, grey
UL-Style 2464/1061
colour of wires: white and brown
Rundkabel LIYY AWG24, grau
UL-Style 2464/1061
Aderfarben: weiss und braun

Terminals/Connector
ends tinned
Enden verzinnt

Schematic

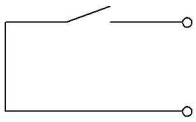

Marking
according to EN60062/factory code
gem. EN60062/Fertigungsstätte

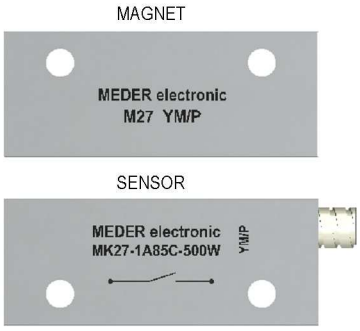

Housing sensor and magnet

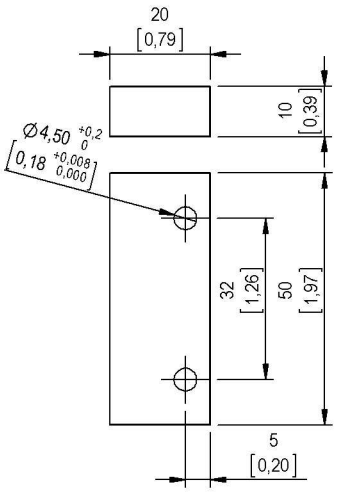

Switching distances

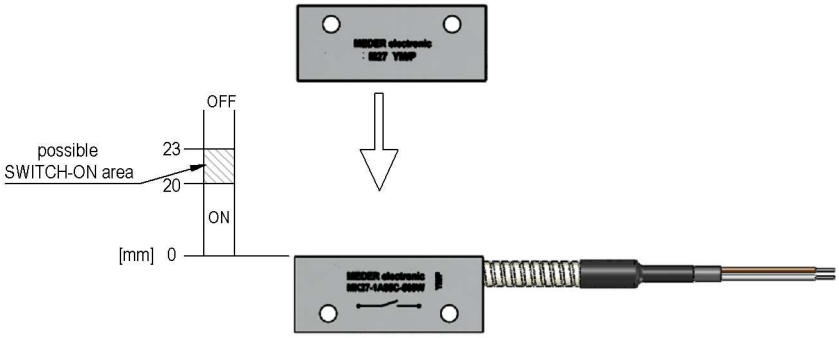

Europe: +49 / 7731 8399 0 | Email: info@meder.com
USA: +1 / 508 295 0771 | Email: salesusa@meder.com
Asia: +852 / 2955 1682 | Email: salesasia@meder.com

Item No.:
9272851054
Item:
MK27-1A85C-500W

Magnetic properties	Conditions	Min	Typ	Max	Unit
Pull-In	at 20°C	66		83	AT
Test equipment		KMS-38 + PH 053			

Contact Data 85	Conditions	Min	Typ	Max	Unit
Contact rating	Any DC combination of V & A not to exceed their individual max.'s			100	W
Switching voltage	DC or Peak AC			300	V
Switching current	DC or Peak AC			1	A
Carry current	DC or Peak AC 100% Duty Cycle			2,5	A

Special Product Data	Conditions	Min	Typ	Max	Unit
Contact - form		A - NO			
Sensor-resistance	measured with 40% overdrive			270	mOhm
Housing material		Aluminium			
Sealing compound		Polyurethan			
Reach / RoHS conformity		yes			

Environmental data	Conditions	Min	Typ	Max	Unit
Shock	1/2 sine, duration 11ms, in 3 axis			50	g
Vibration	from 10 - 2000 Hz			20	g
Operating temperature	cable not moved	-30		80	°C
Operating temperature	cable moved	-5		80	°C
Storage temperature		-30		80	°C

Cable specification	Conditions	Min	Typ	Max	Unit
Cable type		round cable			
Cable material		PVC			
Cross section		AWG 24			

General data	Conditions	Min	Typ	Max	Unit
Mounting advice		over 5m cable, a resistor is recommended.			
Mounting advice		Decreased switching distances by mounting on iron.			
Mounting advice		Magnetically conductive screws must not be used.			